Medium/High Back Pressure Compressor R22

- Condensing Temp Range ≤65℃
- Compressor Internal Protectors:Internal Motor Protector and Pressure Relief Value
- To obtain refrigeration capacity at 60Hz , multiply its values at 50Hz by 1.2
- *Condensing Temp :45℃

Performance parameter

Model	Horsepower (H.P.)	Displacement (cm³)	Power source	The condensing temperature	Nominal Capacity (W)	COP(W)	Noise dB(A) (SPL)	The Evaporating Temperature (W)					
								-25℃ -12°F	-15℃ +5°F	-10℃ +14°F	0℃ +32°F	+7.2℃ +45°F	+15℃ +59°F
QR3-44	2	44	220V/3PH /60Hz 380V/3PH /50Hz 380V/3PH /60Hz 460V/3PH /60Hz	54.5°C/50Hz	5770	2.9	≤62	1320*	1960	2480	4300	5770	7830
QR3-52	2.5	52			7050	2.9	≤64	1610*	2370	3180	5300	7050	9200
QR3-58	3	58.2			7900	3	≤65	1820*	2720	3680	5950	7900	10300
QR3-62	3	62.7			8500	3	≤65	1950*	2890	3830	6300	8500	11450
QR3-74	3.5	74.2			9860	2.9	≤65	2038*	3000	4300	7330	9860	12900
QR3-90	4	90.2			11250	2.9	≤65	1330	3100	4370	7840	11250	16000
QR3-112	5	112.5			14900	2.8	≤66	2060	4470	6130	10600	14900	20660
QR3-124	6	124.4			16640	2.8	≤67	2500	5160	6970	11860	16640	23360
QR3-134	7	134.8			17800	2.75	≤69	2800	5630	7500	12630	17800	25200

Application parameter

Motor data							Refrigera Oil Charge Ω (25°C)	Refrigerator Oil Grade
Model	Motorinput(W)	RLA(A)	LRA(A)	Insulation Level	Revolutions rev/min	Line to Line Resistance Ω (25°C)		
QR3-44	2060	3.8	30	F	≥2860	6.8	1500	SUNISO 3GS
QR3-52	2420	4.7	30			6.8		
QR3-58	2680	5	39			4		
QR3-62	2930	5.4	39			4		
QR3-74	3660	6.7	39			3.4		
QR3-90	3980	7.3	55			3.6	2000	SUNISO 4GS
QR3-112	5250	9.6	70			2.2		
QR3-124	5860	10.6	70			2.2		
QR3-134	6300	11.7	70			2		

Low Back Pressure Compressor R404a2

- Condensing Temp Range ≤65℃
- Compressor Internal Protectors:Internal Motor Protector and Pressure Relief Value
- To obtain refrigeration capacity at 60Hz , multiply its values at 50Hz by 1.2
- *Condensing Temp :50℃

Performance parameter

Model	Horsepower (H.P.)	Displacement (cm³)	Power source	The condensing temperature	Nominal Capacity (W)	COP (W)	NoisedB(A) (SPL)	The Evaporating Temperature (W)						
								-40℃ -40°F	-35℃ -31°F	-30℃ -22°F	-23.3℃ -9.9°F	-20℃ -4°F	-10℃ +14°F	0℃ +32°F
QL52	2.5	52	220-240V/1PH /50Hz 208-230V/1PH /60Hz	54.5℃/50Hz	2180	1.5	≤64	420*	730	1310	2189	2660	4410	6100
QL62	3	62.7			2760	1.5	≤65	720*	1040	1728	2765	2930	5421	7900
QL3-52	2.5	52	220V/3PH/60Hz 380V/3PH/50Hz 380V/3PH/60Hz 460V/3PH/60Hz		2180	1.5	≤64	420*	730	1310	2180	2660	4410	6100
QL3-74	3.5	74.2			3135	1.5	≤65	1200*	1380	2016	3135	3796	6220	8644
QL3-112	5	112.5			4350	1.5	≤66	1407*	1743	2704	4350	5335	9038	12740
QL3-134	7	134.8			5520	1.5	≤66	2012*	2378	3540	5520	6688	11060	15430

Application parameter

Motor data							Refrigera Oil Charge CC	Refrigerator Oil Grade
Model	Motorinput(W)	RLA(A)	LRA(A)	Insulation Level	Revolutions rev/min	Line to Line Resistance Ω (25°C)		
Q52	1380	6.8	63	F	≥2860		1500	EMKARATE RL32H
QL62	1800	11.1	74					
QL3-52	1380	2.5	28			6.8		
QL3-74	2060	3.2	36			3.3		
QL3-112	2830	5	68			2.2	2000	
QL3-134	3620	6.3	68			2		

PISTON COMPRESSOR Dimensional Drawing

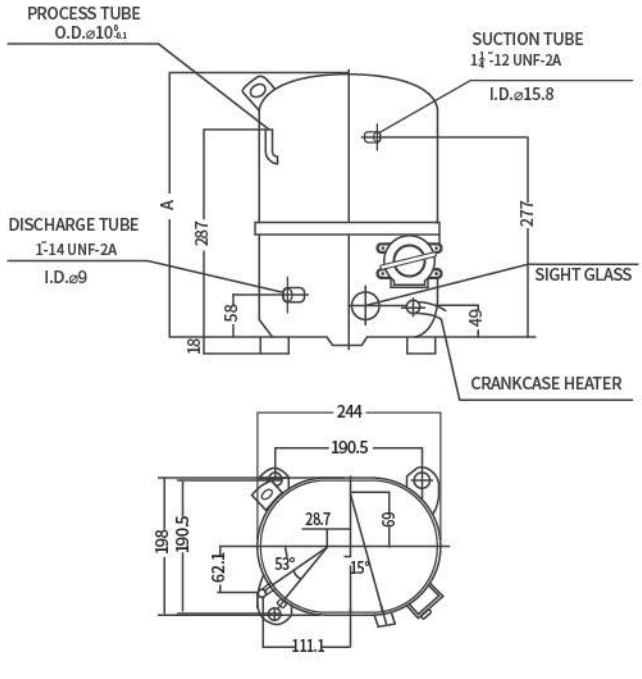

Model	A IN/mm
QR3-44 (QR44)	14/355
QR3-52 (QR52)	14/355
QR3-58 (QR58)	14.4/365
QR3-62 (QR62)	14.4/365
QR3-74	14.4/365

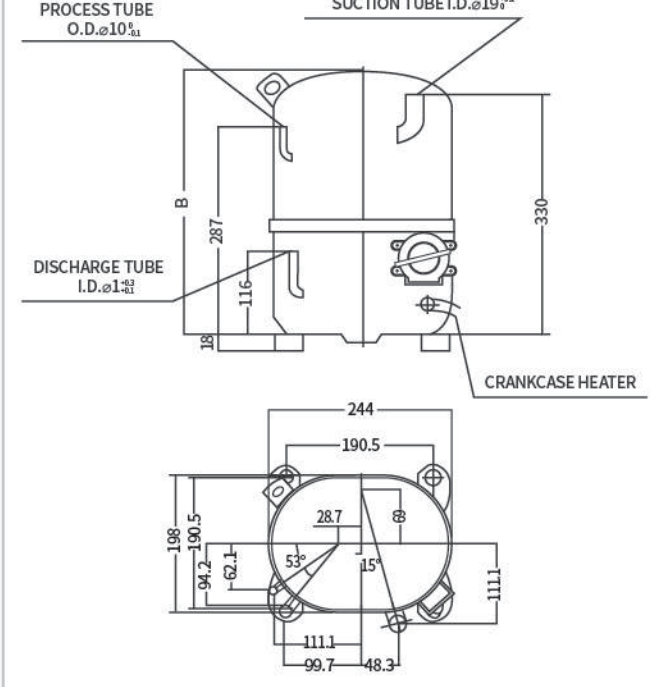

Model	B IN/mm
QR3-44A (QR44A)	14/355
QR3-52A (QR52A)	14/355
QR3-58A (QR58A)	14.4/365
QR3-62A (QR62A)	14.4/365
QR3-74A	14.4/365

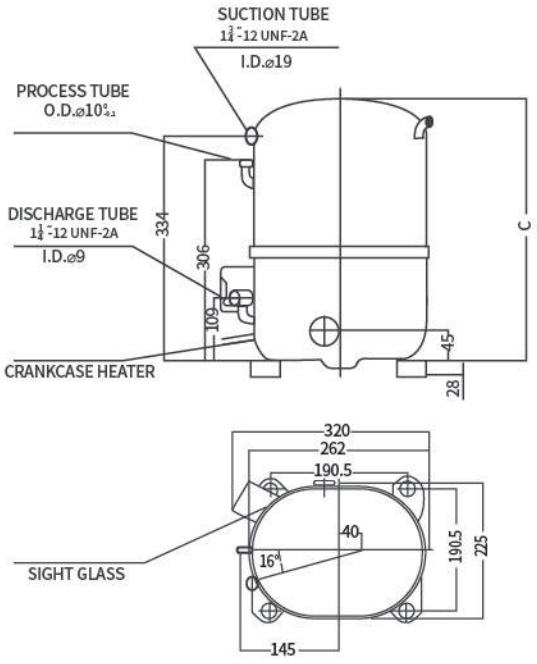

Model	C IN/mm
QR3-90	15.3/388
QR3-100	15.3/388
QR3-112	15.7/398
QR3-124	15.7/398
QR3-134	15.7/398

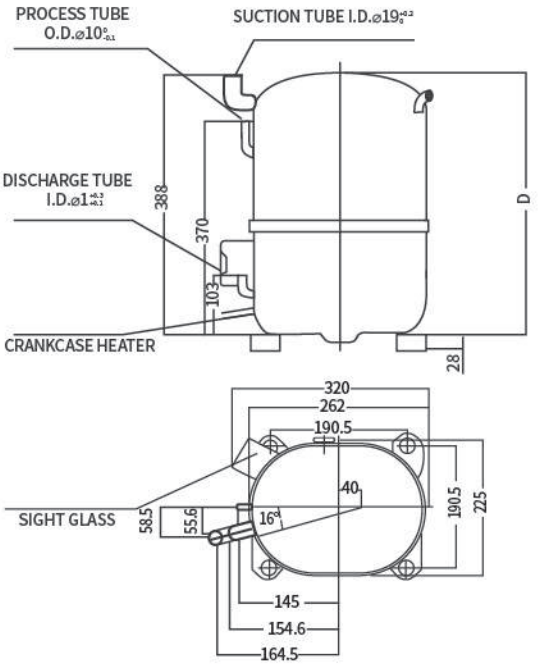

Model	D IN/mm
QR3-90A	15.3/388
QR3-100A	15.3/388
QR3-112A	15.7/398
QR3-124A	15.7/398
QR3-134A	15.7/398

QR MODELS Operating Conditions R404

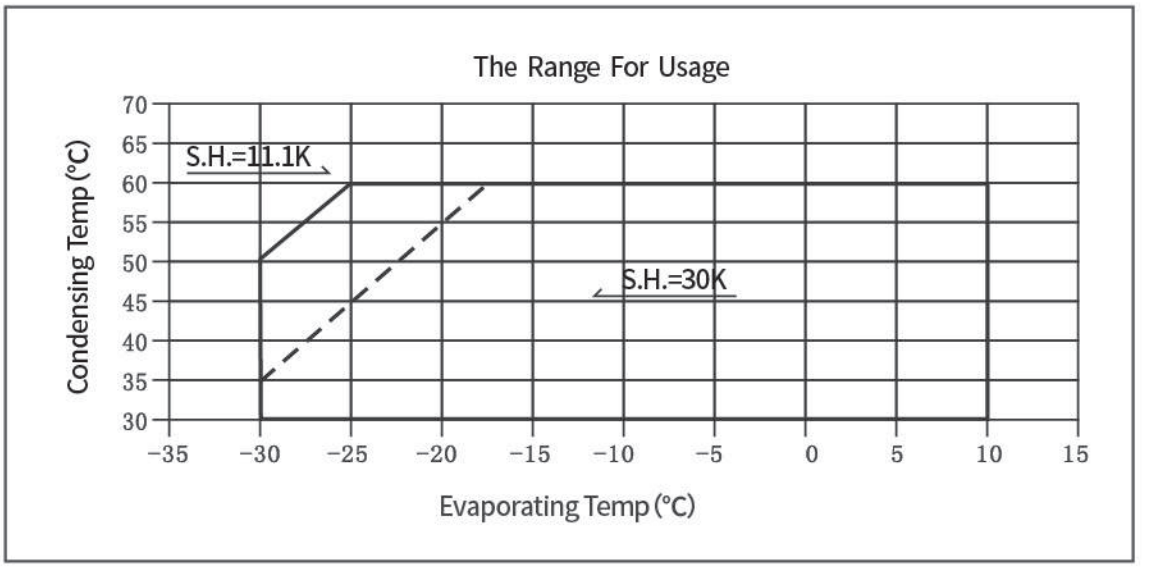

QR MODELS Operating Conditions R22

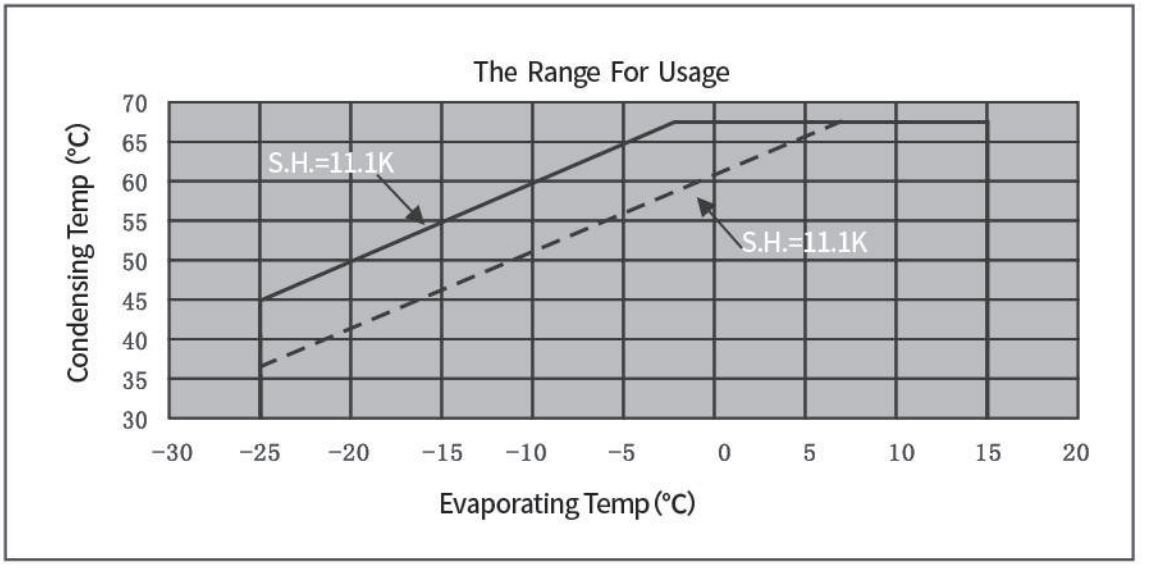

QL MODELS Operating Conditions R404

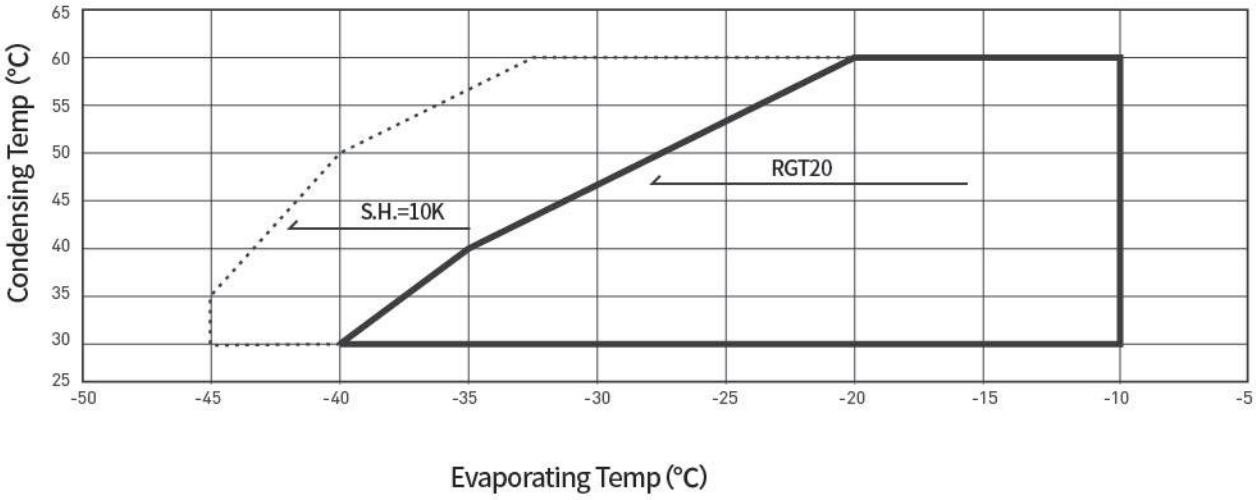
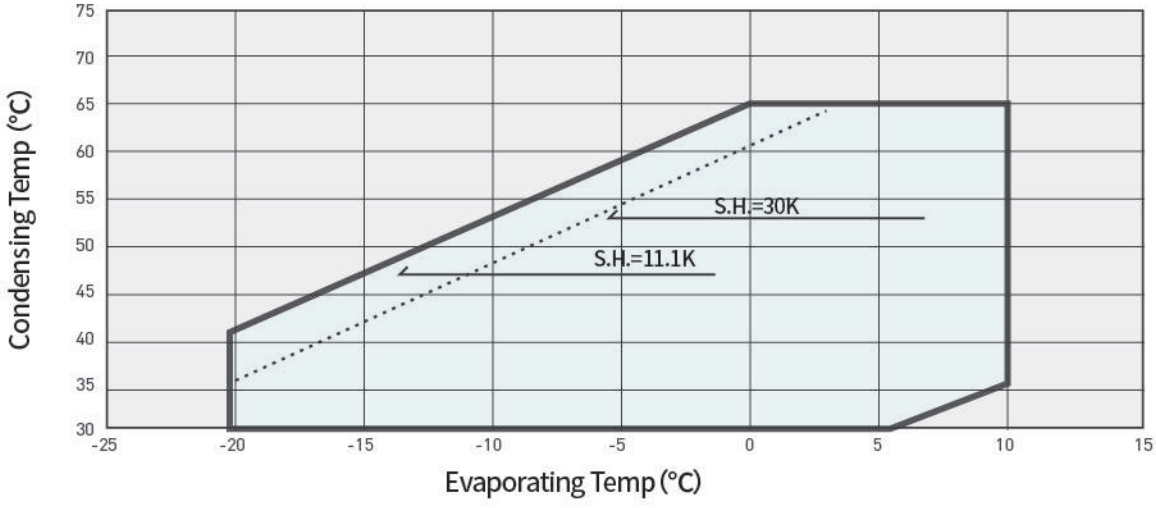
QRV MODELS Operating Conditions R404